TUSB8040A1 Evaluation Module

User's Guide

Literature Number: SLLU183A
June 2013–Revised July 2013

Contents

1 Introduction 3
2 Hardware Overview 4
1 TUSB8040A1 4
2 USB Port Connectors 4
2.1 USB Port Connector - Power 4
2.2 USB Port Connector – Noise Filtering 5
3 Hub Configuration 5
4 Optional Serial EEPROM 5
5 Power/Reset 5
6 Optional Circuitry 6
3 Hardware Set Up 7
1 Configuration Switches 7
2 Hardwired Configurations 8
3 EVM Installation 8
4 Troubleshooting 9
Appendix A Schematics 10
Appendix B TUSB8040A1EVM Bill of Materials 14

Copyright © 2013, Texas Instruments Incorporated

Introduction

The TI TUSB8040A1EVM is a functional board design of a single device that implements both a USB 3.0 hub and a USB 2.0 hub. The EVM can support both SuperSpeed (SS) and USB 2.0 (HS, FS, and LS) operation on its USB ports. This EVM is intended for use in evaluating system compatibility, developing optional EEPROM firmware, and validating interoperability. This EVM also acts as a hardware reference design for any implementation of the TUSB8040A1.

Upon request, layout files for the EVM can be provided to illustrate techniques used to route the differential pairs, use of split power planes, placement of filters and other critical components, and methods used to achieve length matching of critical signals.

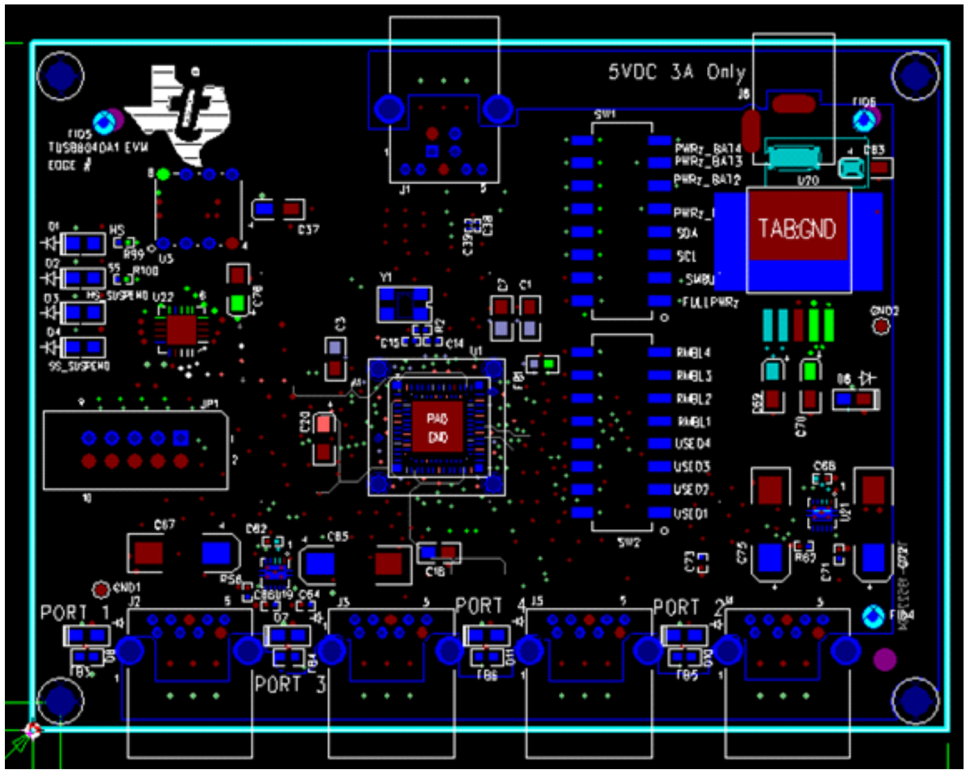

Note the EVM dimensions of 3” × 4” accommodates various lab test components, actual production implementations can be much smaller. Also, the TUSB8040A1EVM is laid out to accept either a TUSB8040A1 unit or a socket. This socket functionality would not need to be duplicated on a production implementation.

Figure 1. TUSB8040A1EVM Top Layer Layout

Microsoft, Windows are registered trademarks of Microsoft Corporation.

Copyright © 2013, Texas Instruments Incorporated

Hardware Overview

The TUSB8040A1EVM (EVM) board hardware can be divided into five functional areas:

1 TUSB8040A1

The TUSB8040A1 on the EVM (U1 on the schematic) operates as a functional interconnect between an upstream connection to a USB host or hub and up to four directly connected downstream devices or hubs. More devices and hubs can be supported if arranged in tiers. The TUSB8040A1 is capable of supporting operation at USB SuperSpeed (SS), High-Speed (HS), Full Speed (FS) or Low Speed (LS). In general, the speed of the upstream connection of the EVM limits the downstream connections to that speed (SS, HS, and FS) or lower.

The TUSB8040A1 requires a 24-MHz low ESR crystal, Y1 with a 1-MΩ feedback resistor. The crystal should be fundamental mode with a load capacitance of 12–24 pF and a frequency stability rating of ±100 PPM or better. To ensure a proper startup oscillation condition, a maximum crystal equivalent series resistance (ESR) of 50 Ω is recommended.

The TUSB8040A1 can also use an oscillator or other clock source. When using an external clock source such as an oscillator, the reference clock should have ±100 PPM (or better) frequency stability and have less than 50 ps absolute peak-to-peak jitter (or less) than 25 ps peak-to-peak jitter after applying the USB 3.0 jitter transfer function.

2 USB Port Connectors

The EVM is equipped with 5 standard nine pin USB 3.0 port connectors. One of these five connectors, J1, is a Type B connector designed to interface with an upstream USB host or hub. The remaining connectors, J2–J5, are Type A connectors for connection to downstream devices or hubs. Standard size connectors were used on the EVM design, but USB micro connectors can be used if desired. It is also possible to implement a legacy USB connector on one or more of the downstream ports if SS operation is not desired.

The USB ports can be attached via a standard USB cable to any USB 3.0 or legacy USB host, hub or device. The TUSB8040A1 will automatically connect to any upstream USB 3.0 host or hub at both SS and HS. Using a legacy USB cable between the EVM and a USB 3.0 host or hub will force it to HS operation. The same is true if a legacy USB cable is used between the EVM and a downstream SS-capable device in that operation will be limited to USB HS.

2.1 USB Port Connector - Power

VBUS is received from the upstream host or hub on J1. The TUSB8040A1 is configured as a self-powered hub, so there should not be any significant current draw by the EVM from VBUS. The TUSB8040A1 does monitor the VBUS input after filtering through a resistor divider network of a 90.9-kΩ 1% resistor, R1, and a 10-kΩ 1% resistor, R3. VBUS cannot be directly connected to the TUSB8040A1 device.

A bulk capacitor of at least 1 µF is required on the upstream port VBUS input to comply with the USB specification. The EVM uses a 10-µF capacitor, C37.

VBUS, sourced by the 5-V wall power input, J6, is provided to the downstream port connectors so that bus powered devices may be attached to the downstream ports. The USB 3.0 specification limits the current consumption of a USB 3.0 device to 900 mA @ 5 V. The current limiting parameter of the TPS2560 devices, U19 and U21, is configured to 1.5 A to avoid any spurious overcurrent events due to bus-powered HDD spin-up power fluctuations: (TPS2560). A production implementation could place stricter limits on this power consumption. An overcurrent event on any of the downstream port connectors will be reported to the TUSB8040A1 via the OVERCURxZ inputs.

Copyright © 2013, Texas Instruments Incorporated

2.2 USB Port Connector – Noise Filtering

Each downstream VBUS output has a 150-µF bulk capacitor (C65, C67, C72, C75) as recommended by the TPS2560 data manual to prevent in-rush current events on the downstream devices. In addition, there are ferrite beads and small capacitors on the VBUS lines to reduce noise and address ESD or EMI concerns.

The EVM also implements optional isolation using two small noise filtering capacitors and a 1-MΩ resistor between the earth ground of each connector and the digital ground of the EVM, this is not a requirement but should be used if ground isolation is desired.

Please note that the series capacitors implemented on the SS TX pairs are incorporated to satisfy the USB 3.0 requirement that differential links be AC coupled on the transmit pair.

3 Hub Configuration

The EVM can be configured by setting several inputs to the TUSB8040A1 that are sampled at power-on reset or using an optional serial EEPROM. See Configuration Switches for a full description of these inputs and how to configure them. A production implementation would either rely on the default internal pull-up or pull-down resistor for each configuration input or override it with an external pull-up or pull-down resistor.

4 Optional Serial EEPROM

Each EVM is equipped with an onboard EEPROM / socket placeholder. A small I^2C EEPROM can be installed to set the configuration registers as defined in the TUSB8040A1 Data Manual (SLLSEE5). In its default setting, the EVM does not have an EEPROM installed and instead uses the configuration inputs to determine any optional settings of the TUSB8040A1.

The EEPROM interface defaults to programmable (not write-protected) so that any installed EEPROM's contents may be modified to test various settings. If an EEPROM data change is required, the values may be changed using the register access methods outlined in the TUSB8040A1 Datasheet. In addition, a Microsoft® Windows®-based EEPROM utility is available upon request.

5 Power/Reset

The EVM operates from the power provided by a 5-V wall power adapter, not bus power supplied by a USB host. It is recommended to use a wall power adapter that is capable of sourcing 4.0–5.0 A, because the hub must be able to source significant power on its downstream ports (900 mA per port).

The EVM uses a single channel LDO voltage regulator to drop 5 V to 3.3 V. The TPS7A4533, U20, is a 1.5-A output linear regulator: TPS7A4533. The 1.1-V core voltage required by the TUSB8040A1 is sourced by the 3.3-V rail to reduce unnecessary heat dissipation. The TPS74801, U22, is a 1.5-A output single channel LDO linear regulator: TPS74801. Both regulators require few external passive components and are appropriately rated for heat dissipation.

The reset source is the RC circuit created by the internal pull-up resistor of GRSTz and the 1-µF capacitor, C18. The TUSB8040A1 requires a power on reset of 3 ms, the value of the capacitor used in the RC circuit would vary based on the voltage ramp characteristics of the implementation.

Copyright © 2013, Texas Instruments Incorporated

6 Optional Circuitry

The EVM design implements a variety of LEDs, none of which are required by the USB specification. They are provided to make testing and debug easier.

- D1 – Indicates that the upstream USB port is connected at HS.
- D2 – Indicates that the upstream USB port is connected at SS.
- D3 – Indicates that the upstream USB port has entered a HS suspend state.
- D4 - Indicates that the upstream USB port has entered a SS suspend state.
- D7, D8, D10, D11 – Indicate when VBUS is applied to the downstream USB ports. The EVM enables or disables power to all downstream USB ports simultaneously.

The switches present on the EVM are intended for TI lab evaluation only and are not required for production designs.

Copyright © 2013, Texas Instruments Incorporated

Hardware Set Up

1 Configuration Switches

This EVM has two sets of switches to facilitate configuration changes. Changing these switch settings without a complete understanding of the result is not recommended. Configuration inputs are only read by the TUSB8040A1 during power-on reset, changing the switch settings while the EVM is powered on will have no effect. Please refer to Appendix A for additional information in the EVM schematics.

The switch definitions are as follows, with the standard setting in parenthesis:

SW1_1 (on): FULLPWRz Switch. The TUSB8040A1 has an internal pull up on this terminal, so the TUSB8040A1 defaults to a non full power management mode. If the switch is set to the ON position, the terminal is pulled low and full power management mode is enabled. This means that the TUSB8040A1 reports that it supports downstream port power switching in the USB descriptors it sends to the USB host. Since the EVM does implement downstream port power switching, full power management mode should be enabled.

SW1_2 (off): SMBUSz Switch. The TUSB8040A1 has an internal pull up on this terminal, so I^2C interface mode is enabled by default. If the switch is set to the ON position, the terminal is pulled low and SMBUS mode is enabled.

SW1_3 (off): SCL (Serial Clock) Switch. The TUSB8040A1 has an internal pull down on this terminal, so the serial EEPROM/SMBUS interface is disabled. If the switch is set to the ON position, a pull-up resistor is connected to the serial clock terminal to indicate that an I^2C EEPROM may be attached (along with a pull-up resistor on SDA).
The SCL_SMBCLK terminal is also sampled at the deassertion of reset to determine if USB 3.0 SS low power states U1 and U2 initiation is disabled. If SCL_SMBCLK is high, U1 and U2 low power state initiation is disabled. If SCL_SMBCLK is low, U1 and U2 low power states are completely enabled. If the optional EEPROM or SMBUS is implemented, the value of the u1u2TimerOvr bit of the Device Configuration Register determines if the low power state initiation is enabled.

SW1_4 (off): SDA (Serial Data) Switch. The TUSB8040A1 has an internal pull down on this terminal, so the serial EEPROM/SMBUS interface is disabled. If the switch is set to the ON position, a pull-up resistor is connected to the serial clock terminal to indicate that an I^2C EEPROM may be attached (along with a pull-up resistor on SCL).
The SDA_SMBDAT terminal is also sampled at the deassertion of reset to determine if the USB 3.0 SS low power states U1 and U2 are disabled. If SDA_SMBDAT is high, U1 and U2 low power states are completely disabled. If SDA_SMBDAT is low, U1 and U2 low power states are enabled. If the optional EEPROM or SMBUS is implemented, the value of the u1u2Disable bit of the Device Configuration Register determines if the low power state U1 and U2 are enabled. Note that disabling U1 and U2 via the SDA_SMBDAT terminal, overrides the U1 and U2 initiation disable of the SCL_SMBCLK terminal.

SW1_5 (off): PWRz_BAT1 Switch. The TUSB8040A1 has an internal pull down on this terminal, so USB Battery Charging mode on Port 1 is disabled by default. If the switch is set to the ON position, the terminal is pulled high and battery charging is enabled on downstream port 1.

SW1_6 (off): PWRz_BAT2 Switch. The TUSB8040A1 has an internal pull down on this terminal, so USB Battery Charging mode on Port 2 is disabled by default. If the switch is set to the ON position, the terminal is pulled high and battery charging is enabled on downstream port 2.

SW1_7 (off): PWRz_BAT3 Switch. The TUSB8040A1 has an internal pull down on this terminal, so USB Battery Charging mode on Port 3 is disabled by default. If the switch is set to the ON position, the terminal is pulled high and battery charging is enabled on downstream port 3.

Copyright © 2013, Texas Instruments Incorporated

SW1_8 (off): PWRz_BAT4 Switch. The TUSB8040A1 has an internal pull down on this terminal, so USB Battery Charging mode on Port 4 is disabled by default. If the switch is set to the ON position, the terminal is pulled high and battery charging is enabled on downstream port 4.

SW2_1 (off): USED1 Switch. The TUSB8040A1 has an internal pull up on this terminal, so Port 1 is enabled by default. If the switch is set to the ON position, the terminal is pulled low, Port 1 is disabled and the TUSB8040A1 will report as 3 port hub (or less, if other USEDx terminals are set low).

SW2_2 (off): USED2 Switch. The TUSB8040A1 has an internal pull up on this terminal, so Port 2 is enabled by default. If the switch is set to the ON position, the terminal is pulled low, Port 2 is disabled and the TUSB8040A1 will report as 3 port hub (or less, if other USEDx terminals are set low).

SW2_3 (off): USED3 Switch. The TUSB8040A1 has an internal pull up on this terminal, so Port 3 is enabled by default. If the switch is set to the ON position, the terminal is pulled low, Port 3 is disabled and the TUSB8040A1 will report as 3 port hub (or less, if other USEDx terminals are set low).

SW2_4 (off): USED4 Switch. The TUSB8040A1 has an internal pull up on this terminal, so Port 4 is enabled by default. If the switch is set to the ON position, the terminal is pulled low, Port 4 is disabled and the TUSB8040A1 will report as 3 port hub (or less, if other USEDx terminals are set low).

SW2_5 (off): RMBL1 Switch. The TUSB8040A1 has an internal pull up on this terminal, so any devices connected to Port 1 are reported as removable by default. If the switch is set to the ON position, the terminal is pulled low and the TUSB8040A1 will report a device connected to Port 1 as non-removable.

SW2_6 (off): RMBL2 Switch. The TUSB8040A1 has an internal pull up on this terminal, so any devices connected to Port 2 are reported as removable by default. If the switch is set to the ON position, the terminal is pulled low and the TUSB8040A1 will report a device connected to Port 2 as non-removable.

SW2_7 (off): RMBL3 Switch. The TUSB8040A1 has an internal pull up on this terminal, so any devices connected to Port 3 are reported as removable by default. If the switch is set to the ON position, the terminal is pulled low and the TUSB8040A1 will report a device connected to Port 3 as non-removable.

SW2_8 (off): RMBL4 Switch. The TUSB8040A1 has an internal pull up on this terminal, so any devices connected to Port 4 are reported as removable by default. If the switch is set to the ON position, the terminal is pulled low and the TUSB8040A1 will report a device connected to Port 4 as non-removable.

2 Hardwired Configurations

PORTINDz - The TUSB8040A1 has an internal pull up on this terminal, so port indicator LED support is not reported to the USB host, by default.

GANGED - The TUSB8040A1 has an internal pull up on this terminal, so ganged downstream power switch support is reported to the USB host, by default. Since the EVM has individual downstream port power switches, this terminal has been pulled low.

HS_SUSPEND_POLARITY - The TUSB8040A1 samples HS_SUSPEND_POLARITY at the deassertion of reset to determine the polarity of the downstream port power switch enables. The TUSB8040A1 has an internal pull down on this terminal to set the power enables to active low.

SS_SUSPEND_SSC - The TUSB8040A1 samples SS_SUSPEND_SSC at the deassertion of reset to determine if SSC is enabled. The TUSB8040A1 has an internal pull down on this terminal to enable SSC.

3 EVM Installation

Install the EVM with the following steps:

1. Attach a 5-V wall power source to J6. LEDs D6 and D9 should turn on.
2. Attach a USB cable between J1 and a USB host. LEDs D5, D7, D8, D10, and D11 should turn on.
   (a) If the EVM is attached to a USB 3.0 host, D1 and D2 should turn on.
   (b) If the EVM is attached to a USB 2.0 host, D1 should turn on.

Copyright © 2013, Texas Instruments Incorporated

4 Troubleshooting

Case 1: Device function(s) are “banged out” in Device Manager.

- Make sure that the latest updates are installed for the operating system.
- Make sure that the latest drivers are installed for the host controller.

Case 2: The EVM does not work at all.

- Verify that all switches are in their default state and the EVM is powered on with a 5-V source with adequate current.
- If installed, remove the serial EEPROM from the EEPROM socket. The EVM does not require an EEPROM to operate.
- In the case where a 12-V power supply has been attached to the EVM, the fault is non-recoverable.

Copyright © 2013, Texas Instruments Incorporated

Appendix A Schematics

Figure 2 through Figure 4 contain the schematics for this EVM.

Copyright © 2013, Texas Instruments Incorporated

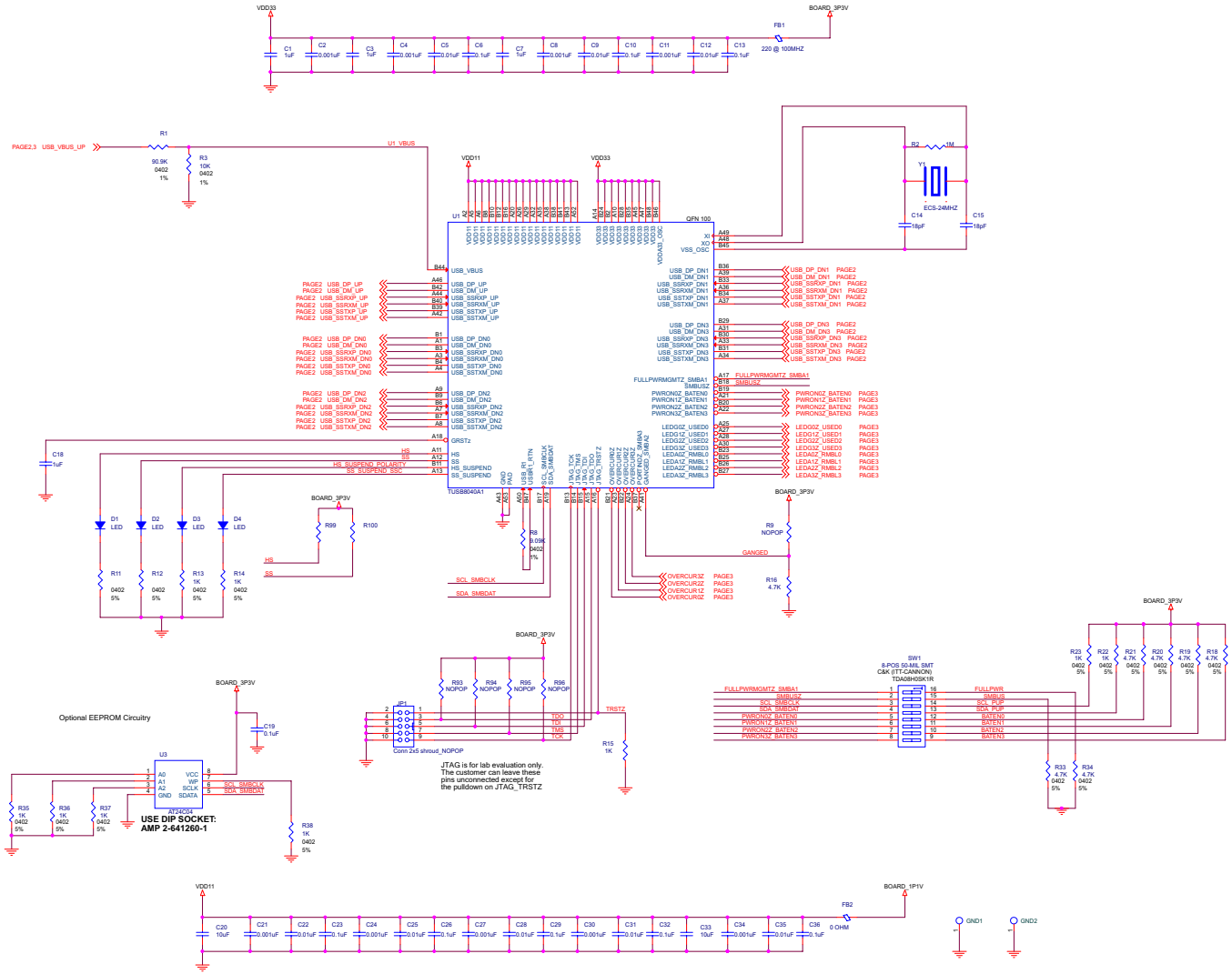

Figure 2. TUSB8040A1EVM Schematic

Copyright © 2013, Texas Instruments Incorporated

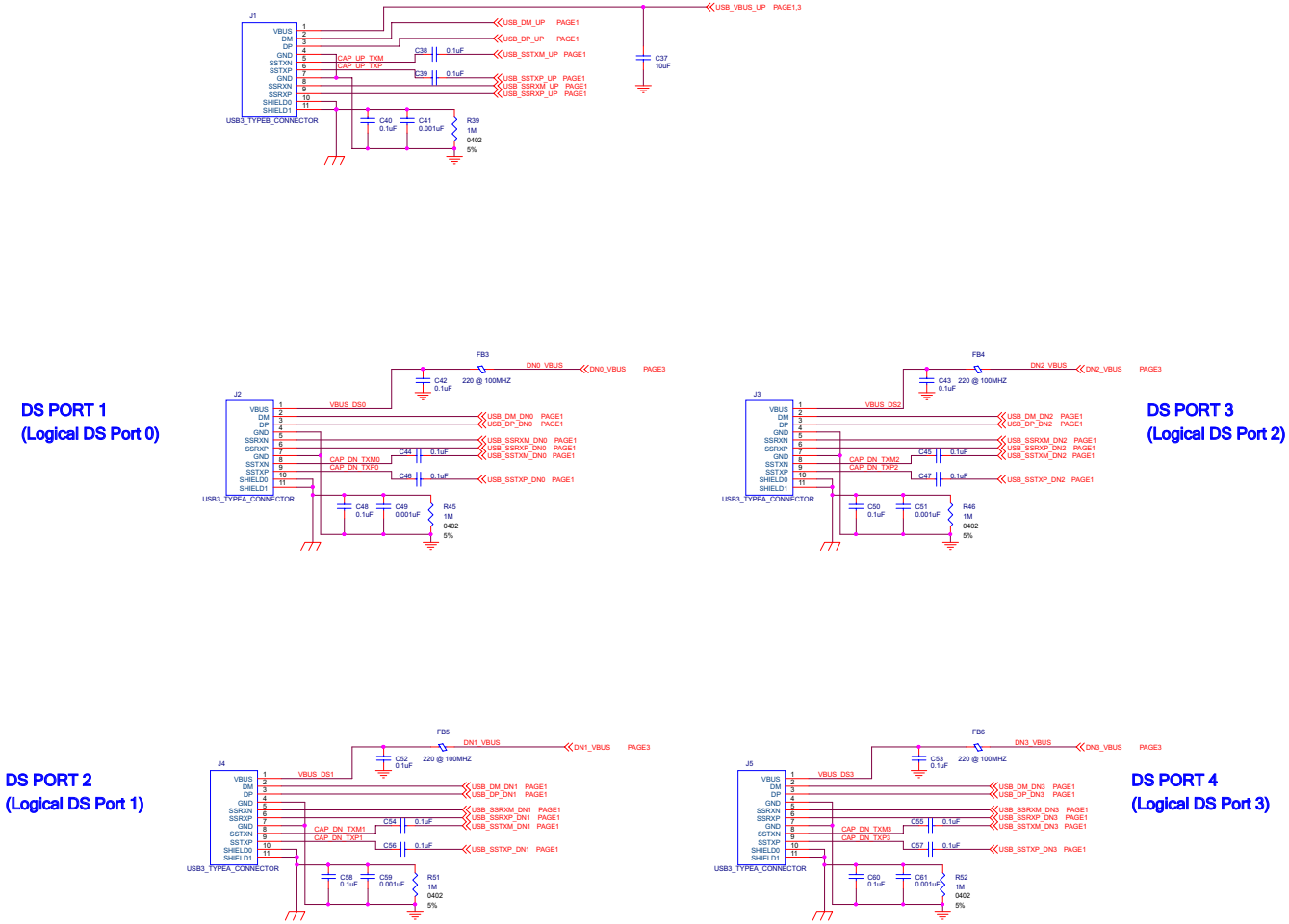

Figure 3. TUSB8040A1EVM USB 3 Connectors

Copyright © 2013, Texas Instruments Incorporated

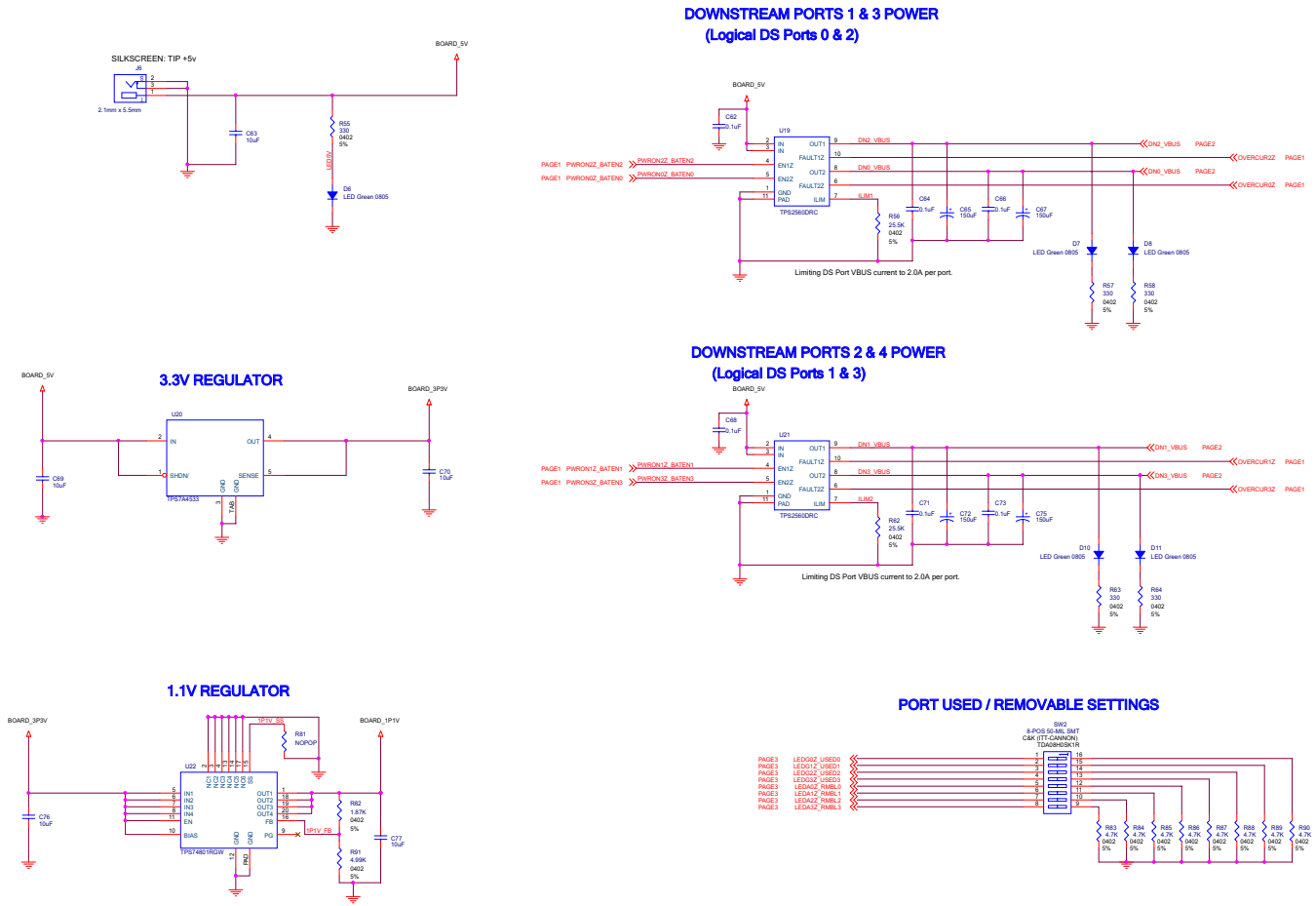

Figure 4. TUSB8040A1EVM Power

Copyright © 2013, Texas Instruments Incorporated

Appendix B TUSB8040A1EVM Bill of Materials

Copyright © 2013, Texas Instruments Incorporated

Table 1 contains the BOM for the EVM.

Table 1. TUSB8040A1EVM BOM

Item	Qty	Reference	Part	Manufacturer	Part Number	Pkg
1	4	C1,C3,C7,C18	1uF	TDK	C2012X7R1A105K	805
2	14	C2,C4,C8,C11,C21,C24,C27,	0.001uF	TDK	C1005X7R1H102K	402
		C30,C34,C41,C49,C51,C59,				
		C61				
3	8	C5,C9,C12,C22,C25,C28,	0.01uF	AVX	0402YC103KAT2A	402
		C31,C35				
4	24	C6,C10,C13,C19,C23,	0.1uF	Yageo	CC0402KRX5R6BB104	402
		C26,C29,C32,C36,C40,C42,				
		C43,C48,C50,C52,C53,C58,				
		C60,C62,C64,C66,C68,C71,				
		C73				
5	10	C38,C39,C44,C45,C46,C47	0.1uF	TDK	C0603X5R0J104M	201
		C54,C55,C56,C57				
6	2	C14,C15	18pF	AVX	04025A180JAT2A	402
7	8	C20,C33,C37,C63,C69,C70,	10uF	Murata Electronics	GRM31CR61C106KC31L	1206
		C76,C77				
8	4	C65,C67,C72,C75	150uF	Kemet	B45197A2157K409 (Tantalum)	7343
9	6	R9,R81,R93,R94,R95,R96	NOPOP			402
10	9	D1,D2,D3,D4	LED Green 0805	Lite On	LTST-C171GKT	805
		D6,D7,D8,D10,D11				
11	5	FB1,FB3,FB4,FB5,FB6	220 @ 100MHZ Ferrite Bead	Murata	BLM18PG221SN1D	603
12	2	SW1,SW2	8-POS 50-MIL SMT	C&K Components	SD08H0SBR	
13	1	J1	USB3_TYPEB_CONNECTOR	FoxConn	UEB1112C-2AK1-4H	9_RA_TH_B
14	4	J2,J3,J4,J5	USB3_TYPEA_CONNECTOR	FoxConn	UEA1112C-4HK1-4H	9_RA_TH_A
15	1	J6	2.1mm x 5.5mm DC Power Jack	CUI Inc.	PJ-202AH (PJ-002AH)	2.1mm x 5.5mm
16	6	R2,R39,R45,R46,R51,R52	1M	Rohm Semiconductor	MCR01MZPJ105	402
17	1	R1	90.9K 1%	Rohm Semiconductor	MCR01MZPF9092	402
18	1	R3	10K 1%	Rohm Semiconductor	MCR01MZPF1002	402
19	15	R16,R18,R19,R20,R21,R33,	4.7K	Rohm Semiconductor	MCR01MZPJ472	402
		R34,R83,R84,R85,R86,R87,				
		R88,R89,R90				
20	11	R11,R12,R13,R14,R15,R22,	1K	Rohm Semiconductor	MCR01MZPJ102	402

Copyright © 2013, Texas Instruments Incorporated

Table 1. TUSB8040A1EVM BOM (continued)

Item	Qty	Reference	Part	Manufacturer	Part Number	Pkg
		R23,R35,R36,R37,R38				
21	7	R55,R57,R58,R63,R64,R99,	330	Rohm Semiconductor	MCR01MZPJ331	402
		R100				
22	2	R56,R62	25.5K	Panasonic - ECG	ERJ-2RKF2552X	402
23	1	R82	1.87K	Vishay / Dale	CRCW04021K87FKED	402
24	1	R91	4.99K	Vishay / Dale	CRCW04024K99FKED	402
25	1	U1	TUSB8040A1 - USB 3.0 Hub	Texas Instruments	TUSB8040A1	100QFN
26	1	U3	AT24C04 / SOCKET - I2C EEPROM	Atmel / Tyco	AT24C04A-10PU-1.8 / 2-641260-1	8DIP / 8SOIC SOCKET
27	2	U19,U21	TPS2560DRC - USB Power Switch	Texas Instruments	TPS2560DRC	10SON
28	1	U20	TPS7A4533 - 3.3V Voltage Regulator	Texas Instruments	TPS7A4533KTT	DDPAK-5
29	1	U22	TPS74801RGW - 1.1V Voltage Regulator	Texas Instruments	TPS74801RGW	20VQFN
30	1	Y1	ECS-24MHZ Crystal	ECS	ECX-53B (ECS-240-20-30B-TR)	5.0mm x 3.2mm
31	1	JP1	Conn 2x5 shroud	3M	2510-6003UB	HDR5X2 M 0.1" TH
32	1	R8	9.09K 1%	Panasonic - ECG	ERJ-2RKF9091X	402
33	1	FB2	0 ohm	Panasonic - ECG	ERJ-3GEY0R00V	603

Copyright © 2013, Texas Instruments Incorporated

IMPORTANT NOTICE

Texas Instruments Incorporated and its subsidiaries (TI) reserve the right to make corrections, enhancements, improvements and other changes to its semiconductor products and services per JESD46, latest issue, and to discontinue any product or service per JESD48, latest issue. Buyers should obtain the latest relevant information before placing orders and should verify that such information is current and complete. All semiconductor products (also referred to herein as “components”) are sold subject to TI’s terms and conditions of sale supplied at the time of order acknowledgment.

TI warrants performance of its components to the specifications applicable at the time of sale, in accordance with the warranty in TI’s terms and conditions of sale of semiconductor products. Testing and other quality control techniques are used to the extent TI deems necessary to support this warranty. Except where mandated by applicable law, testing of all parameters of each component is not necessarily performed.

TI assumes no liability for applications assistance or the design of Buyers’ products. Buyers are responsible for their products and applications using TI components. To minimize the risks associated with Buyers’ products and applications, Buyers should provide adequate design and operating safeguards.

TI does not warrant or represent that any license, either express or implied, is granted under any patent right, copyright, mask work right, or other intellectual property right relating to any combination, machine, or process in which TI components or services are used. Information published by TI regarding third-party products or services does not constitute a license to use such products or services or a warranty or endorsement thereof. Use of such information may require a license from a third party under the patents or other intellectual property of the third party, or a license from TI under the patents or other intellectual property of TI.

Reproduction of significant portions of TI information in TI data books or data sheets is permissible only if reproduction is without alteration and is accompanied by all associated warranties, conditions, limitations, and notices. TI is not responsible or liable for such altered documentation. Information of third parties may be subject to additional restrictions.

Resale of TI components or services with statements different from or beyond the parameters stated by TI for that component or service voids all express and any implied warranties for the associated TI component or service and is an unfair and deceptive business practice. TI is not responsible or liable for any such statements.

Buyer acknowledges and agrees that it is solely responsible for compliance with all legal, regulatory and safety-related requirements concerning its products, and any use of TI components in its applications, notwithstanding any applications-related information or support that may be provided by TI. Buyer represents and agrees that it has all the necessary expertise to create and implement safeguards which anticipate dangerous consequences of failures, monitor failures and their consequences, lessen the likelihood of failures that might cause harm and take appropriate remedial actions. Buyer will fully indemnify TI and its representatives against any damages arising out of the use of any TI components in safety-critical applications.

In some cases, TI components may be promoted specifically to facilitate safety-related applications. With such components, TI’s goal is to help enable customers to design and create their own end-product solutions that meet applicable functional safety standards and requirements. Nonetheless, such components are subject to these terms.

No TI components are authorized for use in FDA Class III (or similar life-critical medical equipment) unless authorized officers of the parties have executed a special agreement specifically governing such use.

Only those TI components which TI has specifically designated as military grade or “enhanced plastic” are designed and intended for use in military/aerospace applications or environments. Buyer acknowledges and agrees that any military or aerospace use of TI components which have ***not*** been so designated is solely at the Buyer's risk, and that Buyer is solely responsible for compliance with all legal and regulatory requirements in connection with such use.

TI has specifically designated certain components as meeting ISO/TS16949 requirements, mainly for automotive use. In any case of use of non-designated products, TI will not be responsible for any failure to meet ISO/TS16949.

Products		**Applications**	
Audio	www.ti.com/audio	Automotive and Transportation	www.ti.com/automotive
Amplifiers	amplifier.ti.com	Communications and Telecom	www.ti.com/communications
Data Converters	dataconverter.ti.com	Computers and Peripherals	www.ti.com/computers
DLP® Products	www.dlp.com	Consumer Electronics	www.ti.com/consumer-apps
DSP	dsp.ti.com	Energy and Lighting	www.ti.com/energy
Clocks and Timers	www.ti.com/clocks	Industrial	www.ti.com/industrial
Interface	interface.ti.com	Medical	www.ti.com/medical
Logic	logic.ti.com	Security	www.ti.com/security
Power Mgmt	power.ti.com	Space, Avionics and Defense	www.ti.com/space-avionics-defense
Microcontrollers	microcontroller.ti.com	Video and Imaging	www.ti.com/video
RFID	www.ti-rfid.com		
OMAP Applications Processors	www.ti.com/omap	**TI E2E Community**	e2e.ti.com
Wireless Connectivity	www.ti.com/wirelessconnectivity		

Mailing Address: Texas Instruments, Post Office Box 655303, Dallas, Texas 75265
Copyright © 2015, Texas Instruments Incorporated